Miniature Megapixel Fisheye Lens

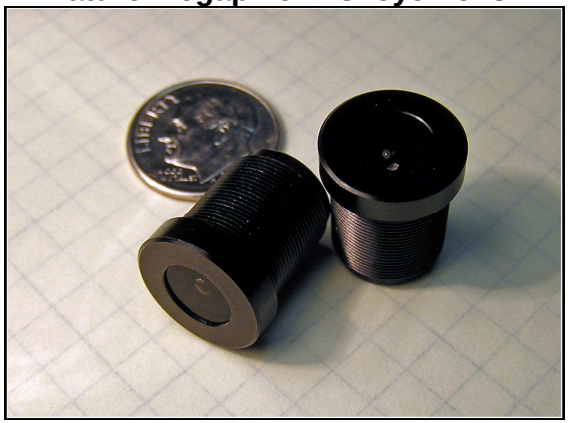

Description

The DSL228 features a compact design, wide field of view and predictable distortion characteristics suitable for dewarping. The DSL228 is optimized for 1/4" format CMOS sensors with multi-megapixel resolution. The relative aperture of F/2.0 provides good low-light performance.

Key Features

- Wide field of view: 75° HFOV on 1/4" imager
- All glass elements provides environmental stability
- Distortion: f-θ type (image height is proportional to the input angle h = f*θ where f is the focal length)

Applications

- Security and surveillance

Optical Specifications

Sunex P/N: DSL228	
Description	Wide angle lens
Image Circle [mm]	5.0
Focal Length [mm]	2.9
Resolution	Center:160/160lp/mm 70% : 125/125lp/mm
F/#	2.0
Distortion [f-θ]	-12% [from f-θ]
Diagonal Field of View [degrees]	120°
Relative Illumination	65%
Chief Ray Angle	11.3°
IR Cut-off Filter Option	Integrated coating optional
Lens Barrel Thread*	M12x0.5

**Adaptor to C-mount available separately*

Sunex Inc.
Telephone: +001 760.602.0988
Order samples online at www.optics-online.com

DSL228 Mechanical (dimensions are in mm):

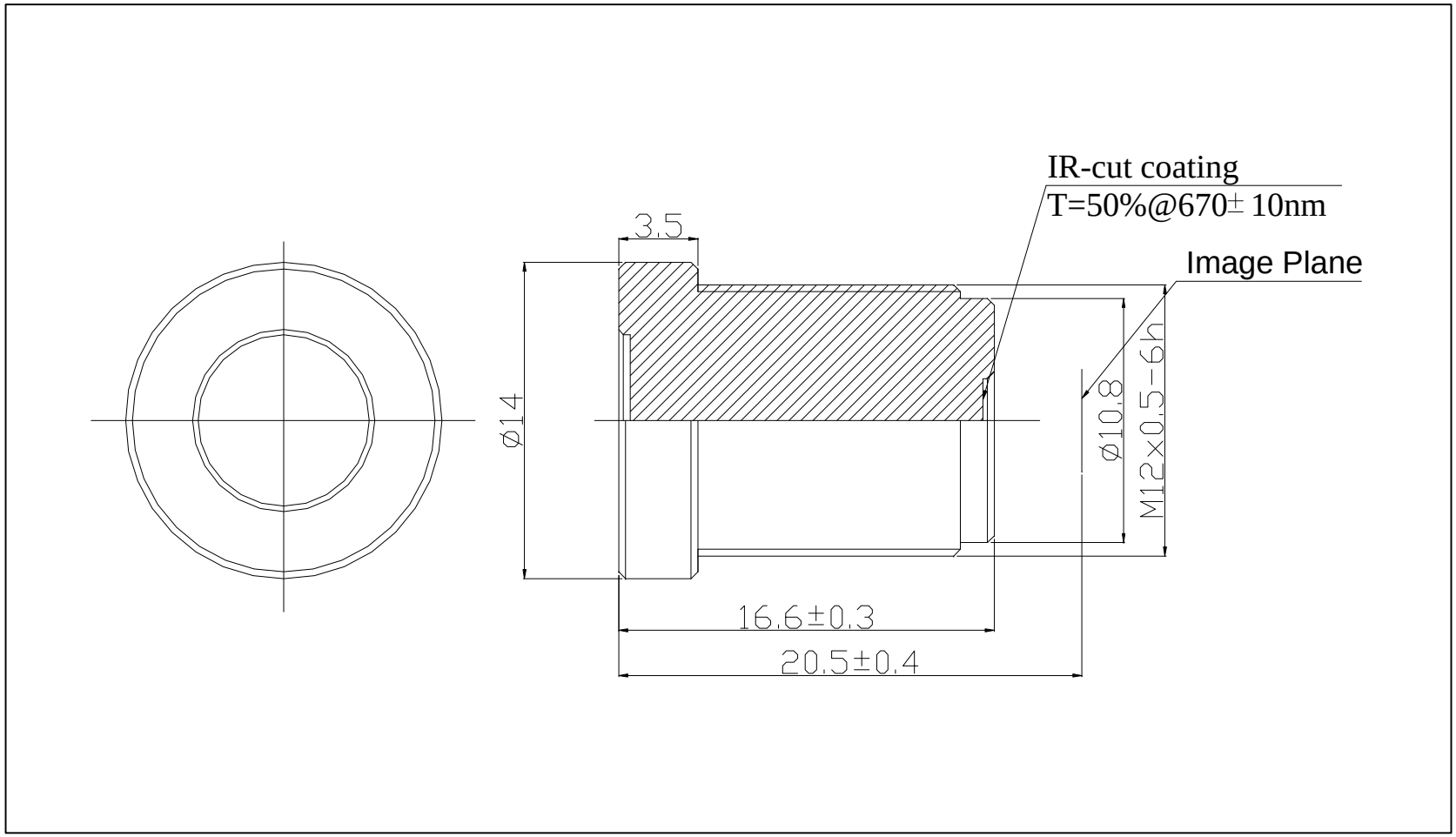

Sunex Inc.
Telephone: +001 760.602.0988
Order samples online at www.optics-online.com